DocuSign Envelope ID: 14C389DA-0793-445A-B520-89B857D23BA6

NOT TO SCALE

PROJECT REFERENCE NO.	SHEET NO.
17BP.14.R.48	EC-5
R/W SHEET NO.	

TEMPORARY ROCK SILT CHECK TYPE 'A' WITH EXCELSIOR MATTING AND POLYACRYLAMIDE (PAM) DETAIL

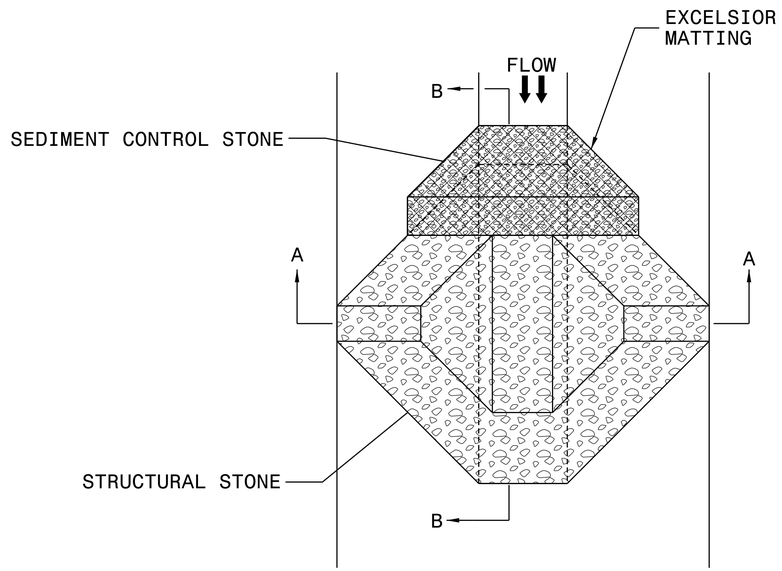

PLAN

NOTES:

INSTALL TEMPORARY ROCK SILT CHECK TYPE A IN ACCORDANCE WITH ROADWAY STANDARD DRAWING NO. 1633.01.

USE EXCELSIOR FOR MATTING MATERIAL AND ANCHOR MATTING SECTION AT TOP AND BOTTOM WITH CLASS B STONE.

PRIOR TO POLYACRYLAMIDE (PAM) APPLICATION, OBTAIN A SOIL SAMPLE FROM PROJECT LOCATION, AND FROM OFFSITE MATERIAL, AND ANALYZE FOR APPROPRIATE PAM FLOCCULANT TO BE APPLIED TO EACH ROCK SILT CHECK.

INITIALLY APPLY 4 OUNCES OF POLYACRYLAMIDE (PAM) TO TOP OF MATTING SECTION AND AFTER EVERY RAINFALL EVENT THAT EQUALS OR EXCEEDS 0.50 INCHES.

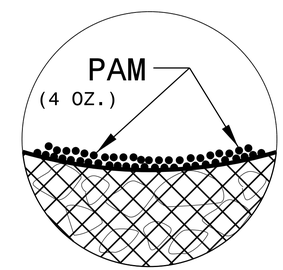

INSET A

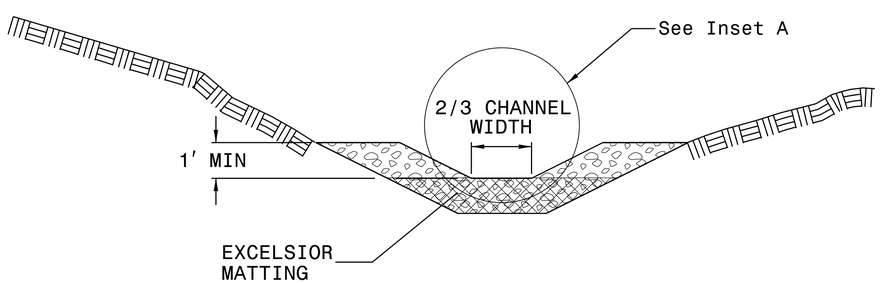

SECTION A-A

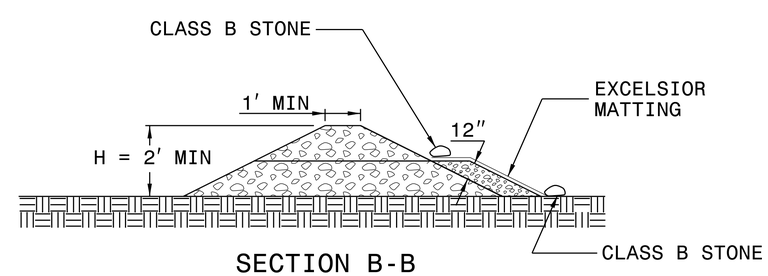

SECTION B-B

REVISIONS

1/25/2018 4:00:54 PM
G:\CKE Projects\CKE21004 Limited Services Division Offices\Group 3\550308\Roadway\Proj\550308_RDY_08_EC_05.dgn
G:\CADD\Plots\CKE21004\Group 3\CKE21004_Group3_rdy_EC.tbl

LOUIS BERGER
1001 Wade Avenue, Suite 400
Raleigh, NC 27605-3322
License No.: F-0840

ROADWAY PLANS